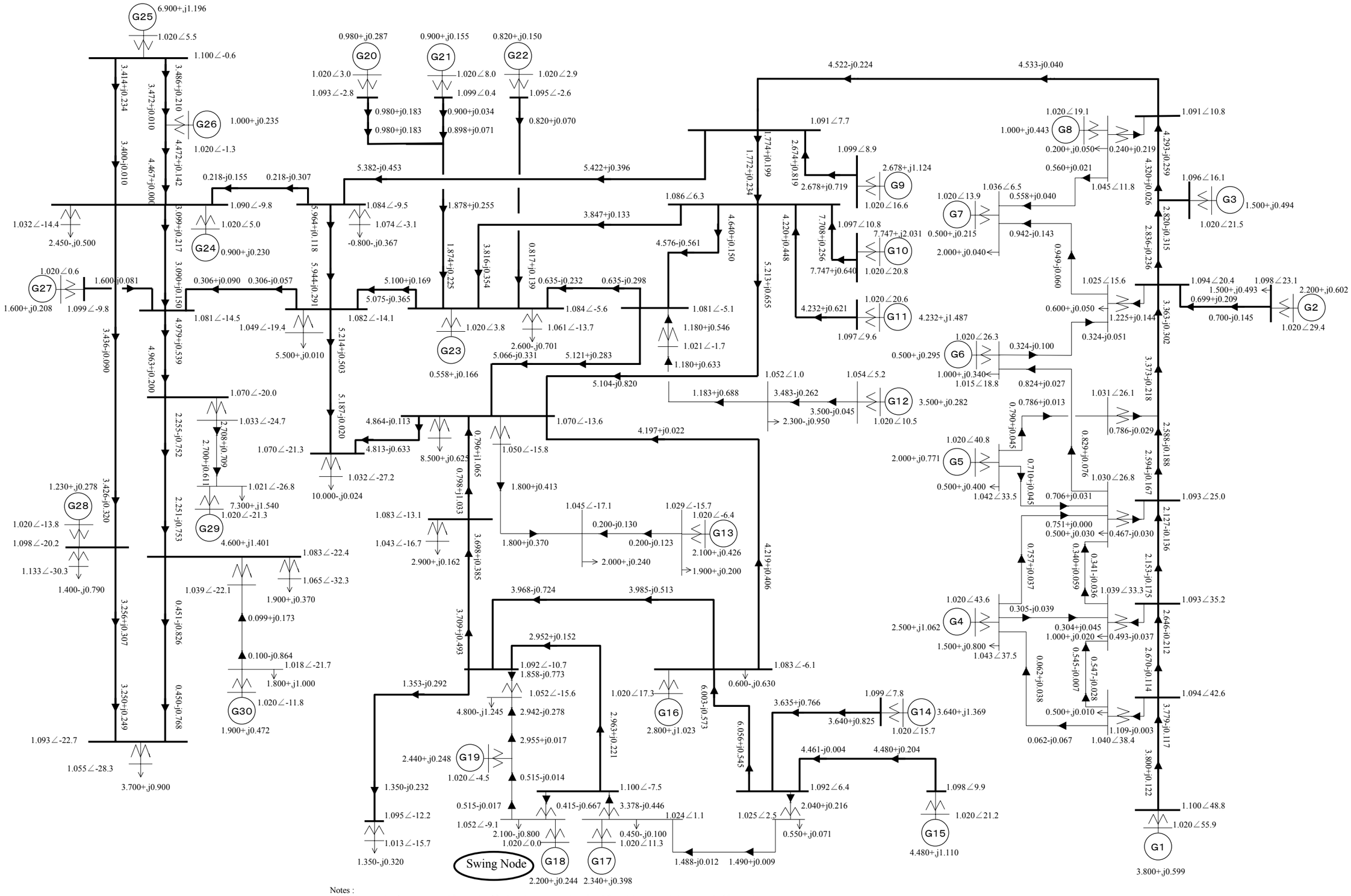
G25
6.900+,j1.196
1.020∠5.5
1.100∠-0.6
G20
0.980+,j0.287
1.020∠3.0
1.093∠-2.8
G21
0.900+,j0.155
1.020∠8.0
1.099∠0.4
G22
0.820+,j0.150
1.020∠2.9
1.095∠-2.6
G26
1.000+,j0.235
1.020∠-1.3
G8
1.020∠19.1
1.000+,j0.443
G9
2.678+,j1.124
1.020∠16.6
G3
1.096∠16.1
1.500+,j0.494
1.020∠21.5
G7
1.020∠13.9
G10
7.747+,j2.031
1.020∠20.8
G24
0.900+,j0.230
G27
1.020∠0.6
1.600+,j0.208
G23
0.558+,j0.166
G11
1.020∠20.6
4.232+,j1.487
1.097∠9.6
G2
1.094∠20.4
1.098∠23.1
2.200+,j0.602
1.020∠29.4
G6
1.020∠26.3
G12
3.500+,j0.282
1.020∠10.5
G5
1.020∠40.8
2.000+,j0.771
G28
1.230+,j0.278
G29
4.600+,j1.401
G13
1.020∠-6.4
2.100+,j0.426
G4
1.020∠43.6
2.500+,j1.062
G30
1.900+,j0.472
G16
1.020∠17.3
2.800+,j1.023
G14
1.099∠7.8
3.640+,j1.369
1.020∠15.7
G19
2.440+,j0.248
1.020∠-4.5
G15
1.020∠21.2
4.480+,j1.110
G18
2.200+,j0.244
G17
2.340+,j0.398
Swing Node
G1
1.020∠55.9
3.800+,j0.599
1.091∠10.8
1.091∠7.7
1.086∠6.3
1.084∠-5.6
1.081∠-5.1
1.082∠-14.1
1.081∠-14.5
1.070∠-20.0
1.070∠-13.6
1.070∠-21.3
1.052∠1.0
1.054∠5.2
1.045∠-17.1
1.029∠-15.7
1.083∠-13.1
1.083∠-22.4
1.092∠-10.7
1.083∠-6.1
1.094∠42.6
1.093∠-22.7
1.055∠-28.3
3.700+,j0.900
1.100∠-48.8
1.093∠25.0
1.093∠35.2
1.031∠26.1
1.030∠26.8
1.039∠33.3
1.045∠11.8
1.025∠15.6
1.036∠6.5
1.052∠-15.6
1.100∠-7.5
1.092∠6.4
1.098∠9.9
1.024∠1.1
1.025∠2.5
1.052∠-9.1
1.095∠-12.2
1.013∠-15.7
1.350-j0.320
1.018∠-21.7
1.040∠38.4
1.043∠37.5
1.042∠33.5
1.133∠-30.3
1.098∠-20.2
1.020∠-13.8
1.400-j0.790
1.039∠-22.1
1.065∠-32.3
1.020∠-11.8
1.020∠-21.3
1.021∠-26.8
1.033∠-24.7
1.018∠-21.7
1.020∠-11.8
1.020∠0.0
1.020∠11.3
1.020∠-15.7
1.020∠-4.5
1.020∠3.8
1.061∠-13.7
1.020∠-21.3
1.032∠-27.2
1.050∠-15.8
1.020∠2.9
1.020∠-2.9
1.020∠-1.3
1.020∠5.0
1.074∠-3.1
1.032∠-14.4
1.093∠-2.8
1.099∠-9.8
1.099∠-9.8
1.099∠-9