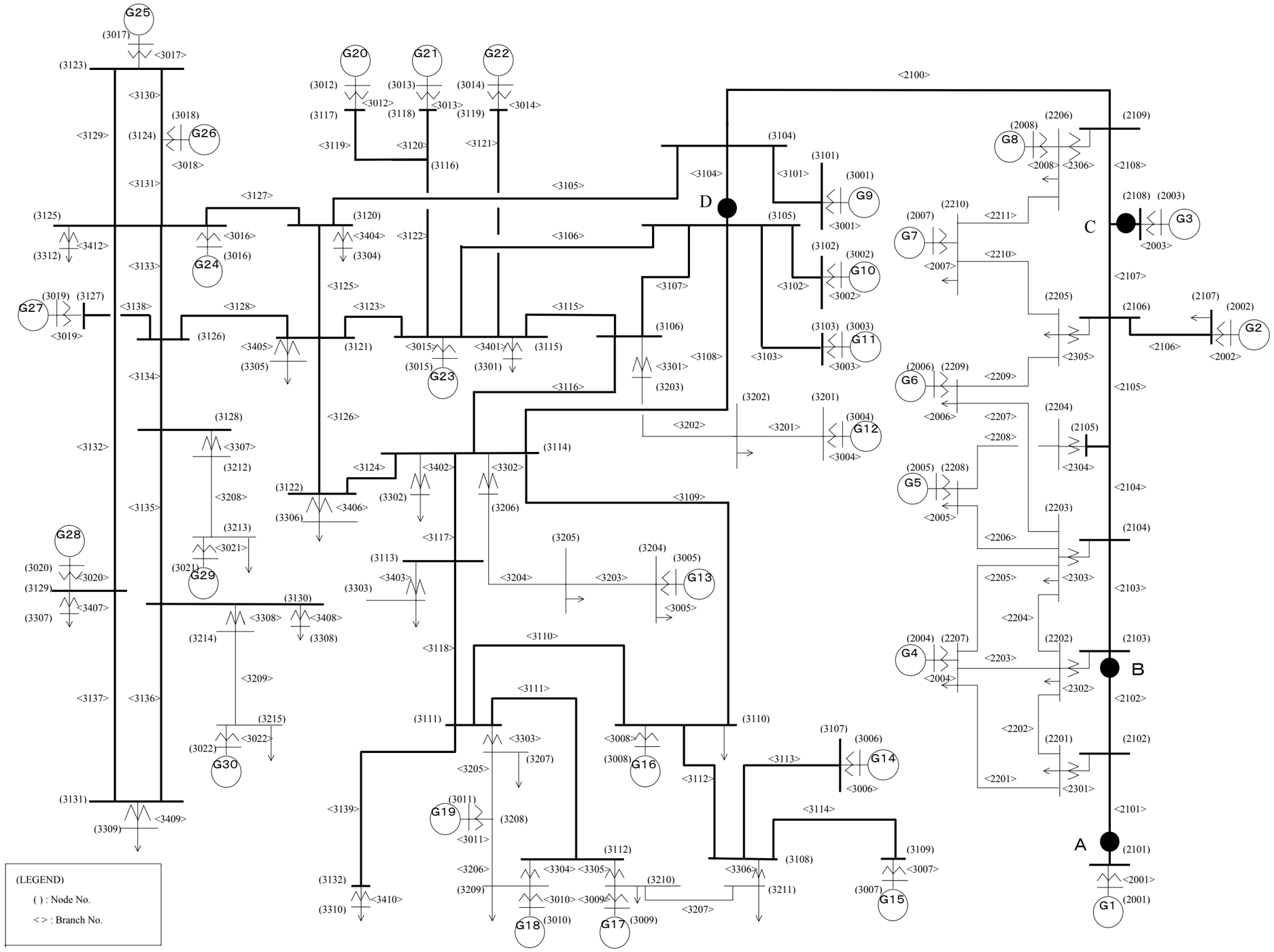

Note : All lines in this figure represent 2 circuits of 3-phase transmission line.

Fig.4.1 IEEJ EAST 30-machine System Model (Node No., Branch No., Disturbance Point)